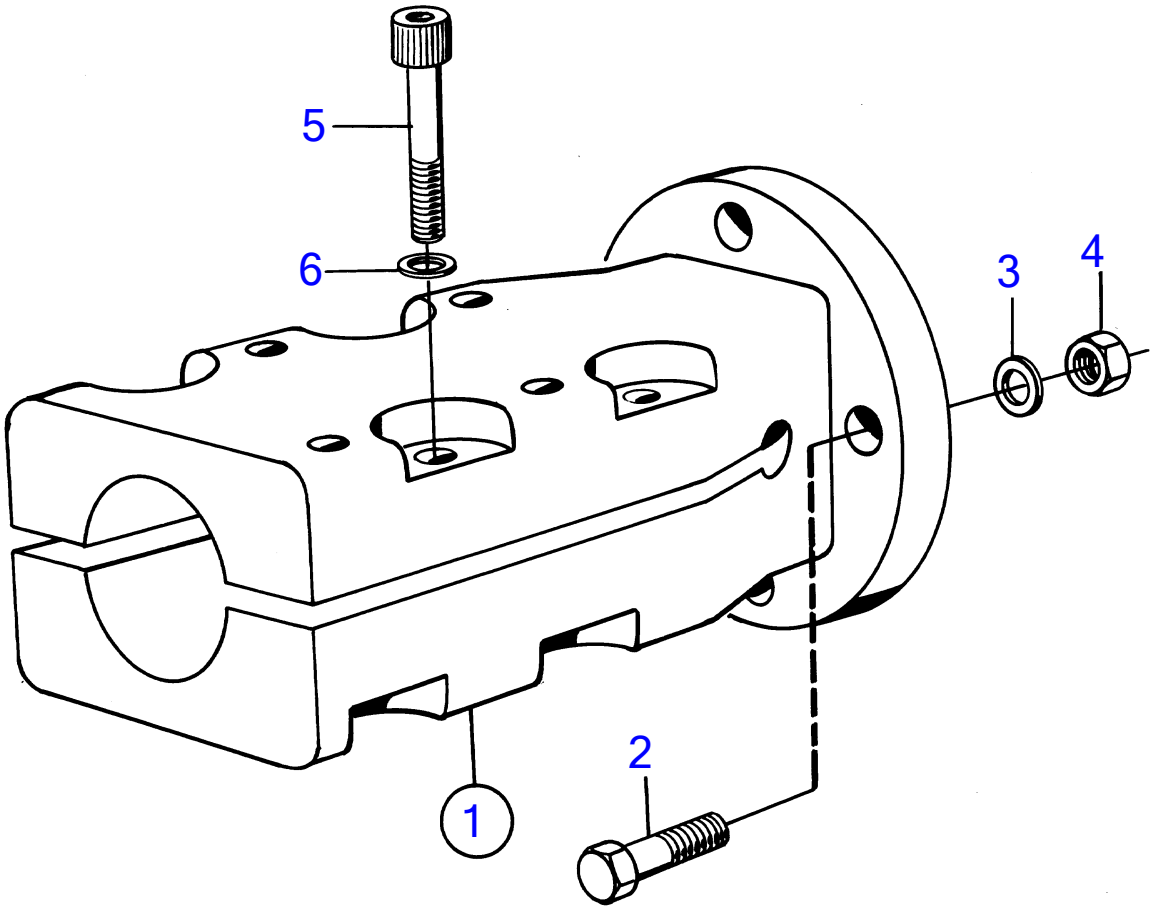

4623

REF	PART NO.	QTY	DESCRIPTION	NOTES
1	(853794)	1	Clamp coupling	For 35mm propeller shaft., For PRM reverse gear., Obsolete part
2	955693	4	▪ Hexagon screw	L=38mm
	955691	4	▪ Hexagon screw	L=25mm
3	941909	4	▪ Spring washer	
4	950375	4	▪ Lock nut	
5	948670	8	▪ Hex. socket screw	
6	947345	8	▪ Washer	